TEAR SHEET

Melange Large Floating Disc Chandelier

Item # KW 5602AB-ALB

Designer: Kelly Wearstler

O/A Height: 47.75"
Fixture Height: 14"
Min. Custom Height: 16.5"
Width: 44.75"
Canopy: 5" Round
Finishes: AB, BZ, PN
Trim Options: ALB
Socket: Dedicated LED
Wattage: 12w (1000lm)
Weight: 19 Pounds
Note: Custom Height Available

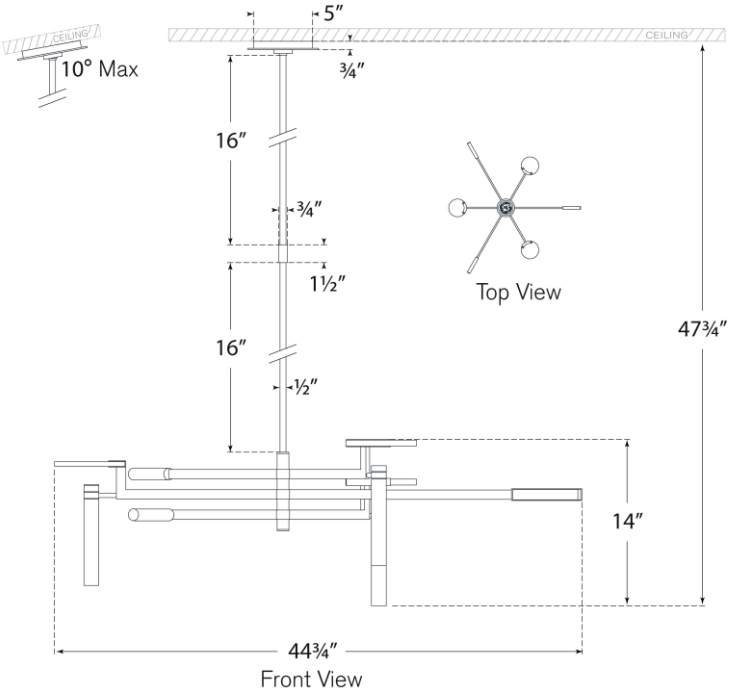

VISUAL COMFORT & CO.