ASSEMBLY INSTRUCTIONS

ITEM DESCRIPTION:

ITEM NO: DW49005	NAME: Catalina Sconce
MATERIAL TYPE: Composite	FINISH: Light Stonewash
SOCKET TYPE: E12	SOCKET QTY: 2
BULB WATTAGE: 25W/CFL 7W/LED 5W	
VOLTAGE: 110-120V	ITEM NET WEIGHT: 13.5LBS

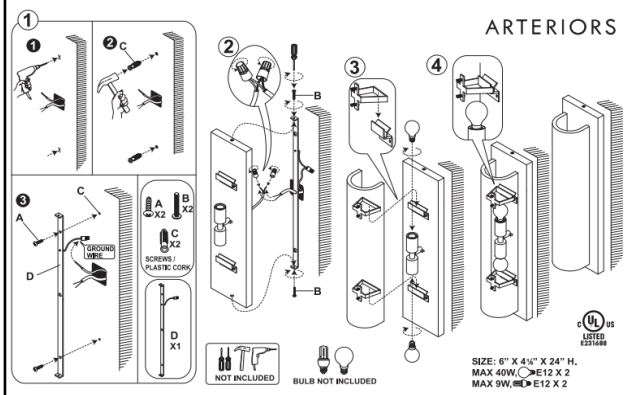

PARTS INCLUDED:

- Mounting Plate
- Back Plate
- Socket Assembly
- Shade

HARDWARE INCLUDED:

- Mounting Screws
- Plastic Wire Connector

TOOLS NEEDED (Not Included):

- 1 Screwdriver

These instructions are provided for safety. It is very important that they are read carefully and completely before beginning installation of this chandelier.

We strongly suggest that all hard-wired fixtures must be installed by a professional electrician.

TO ASSEMBLE:

1. Shut off the main electrical supply from the main fuse box/circuit breaker.
2. Attach mounting plate to wall or junction box using mounting screws (C).
3. Connect ground wire from wall to ground wire from lamp using wire caps (A).
4. Attach house wire to lamp wires as shown. Fasten the pairs together with a wire caps. DO NOT REVERSE THE HOT AND NEUTRAL CONNECTIONS OR SAFETY WILL BE COMPROMISED.
5. Attach front face of light to back plate by inserting canopy screws (B) through predrilled holes in front face and into back plate as shown. Tighten using screwdriver.
6. Insert light bulb.
7. Restore power to junction box and test fixture. DO NOT EXCEED SPECIFIED MAX WATTAGE.

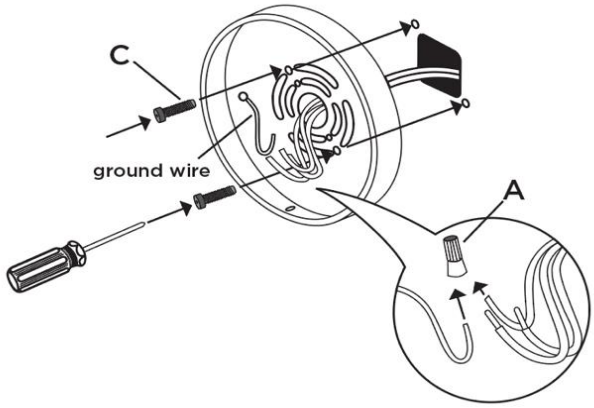

CARE INSTRUCTIONS:

Wipe with a soft, dry cloth. To protect finish, avoid the use of chemicals and household cleaners.

For customer service questions call 1-800-338-2150

ARTERIORS